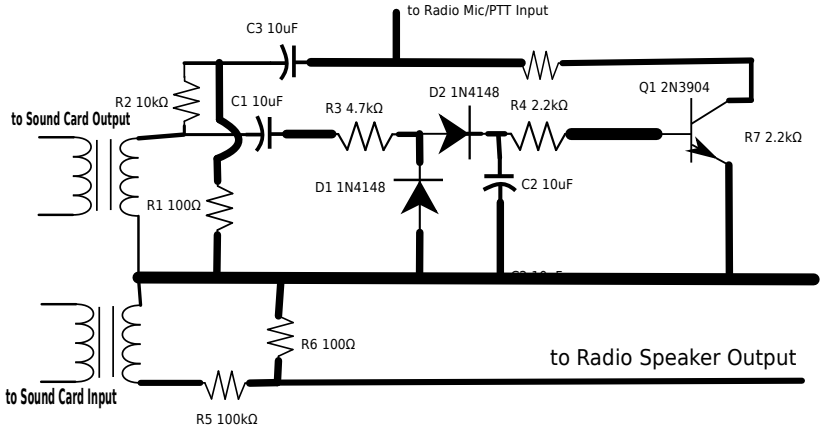
to Radio Mic/PTT Input
C3 10uF
R2 10kΩ
C1 10uF
R3 4.7kΩ
D2 1N4148
R4 2.2kΩ
Q1 2N3904
R7 2.2kΩ
to Sound Card Output
D1 1N4148
C2 10uF
R1 100Ω
R6 100Ω
to Radio Speaker Output
to Sound Card Input
R5 100kΩ

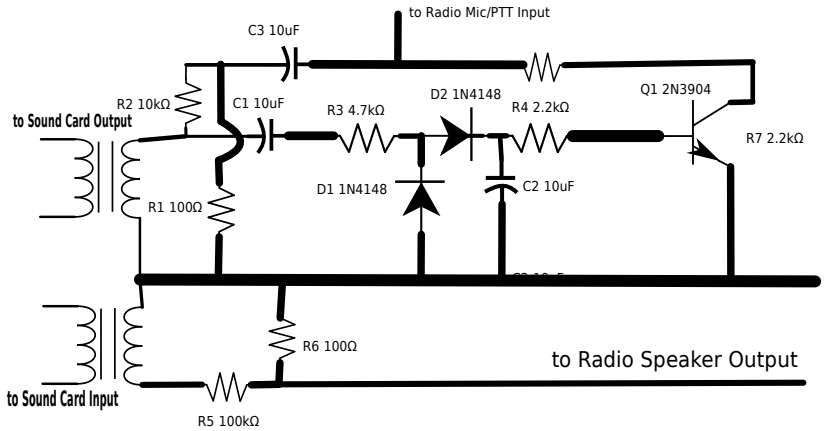
to Radio Mic/PTT Input
C3 10uF
R2 10kΩ
C1 10uF
R3 4.7kΩ
D2 1N4148
R4 2.2kΩ
Q1 2N3904
R7 2.2kΩ
to Sound Card Output
D1 1N4148
C2 10uF
R1 100Ω
R6 100Ω
to Radio Speaker Output
to Sound Card Input
R5 100kΩ

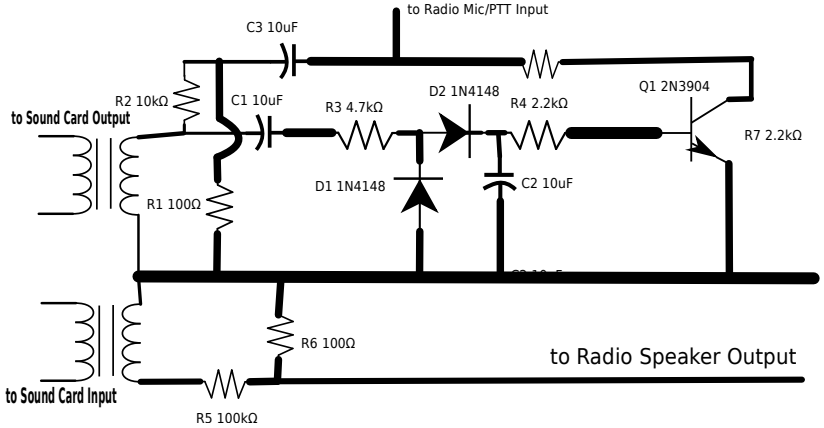
to Radio Mic/PTT Input
C3 10uF
R2 10kΩ
C1 10uF
R3 4.7kΩ
D2 1N4148
R4 2.2kΩ
Q1 2N3904
R7 2.2kΩ
to Sound Card Output
D1 1N4148
C2 10uF
R1 100Ω
R6 100Ω
to Radio Speaker Output
to Sound Card Input
R5 100kΩ

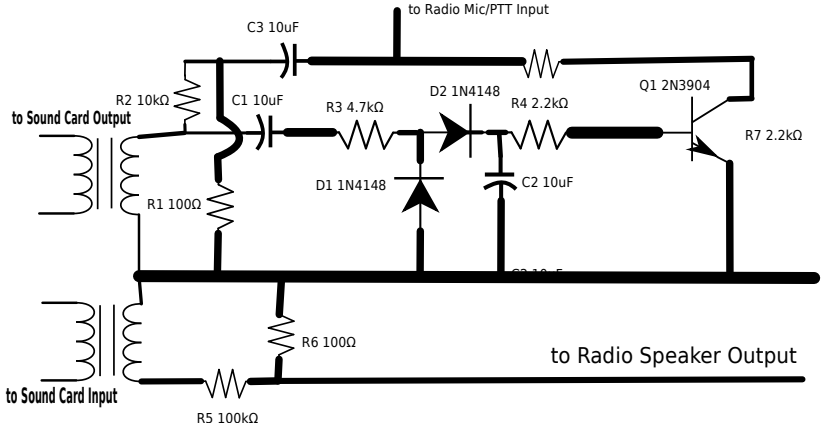
to Radio Mic/PTT Input
C3 10uF
R2 10kΩ
C1 10uF
R3 4.7kΩ
D2 1N4148
R4 2.2kΩ
Q1 2N3904
R7 2.2kΩ
to Sound Card Output
D1 1N4148
C2 10uF
R1 100Ω
R6 100Ω
to Radio Speaker Output
to Sound Card Input
R5 100kΩ

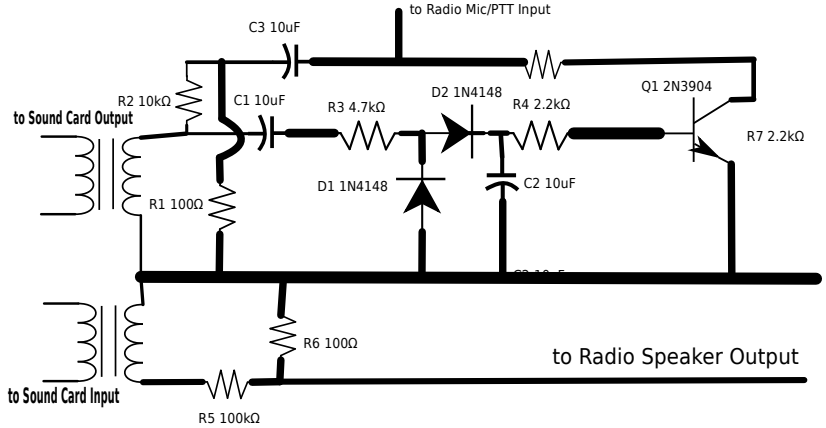
to Radio Mic/PTT Input
C3 10uF
R2 10kΩ
C1 10uF
R3 4.7kΩ
D2 1N4148
R4 2.2kΩ
Q1 2N3904
R7 2.2kΩ
to Sound Card Output
D1 1N4148
C2 10uF
R1 100Ω
R6 100Ω
to Radio Speaker Output
to Sound Card Input
R5 100kΩ

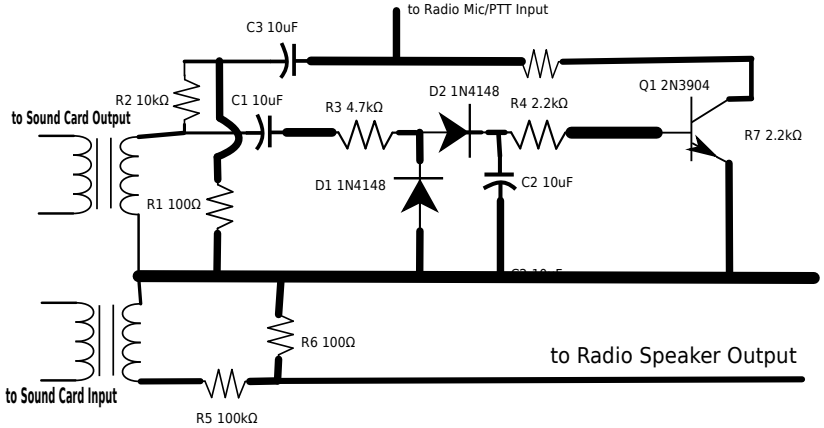
to Radio Mic/PTT Input
C3 10uF
R2 10kΩ
C1 10uF
R3 4.7kΩ
D2 1N4148
R4 2.2kΩ
Q1 2N3904
R7 2.2kΩ
to Sound Card Output
D1 1N4148
C2 10uF
R1 100Ω
R6 100Ω
to Radio Speaker Output
to Sound Card Input
R5 100kΩ

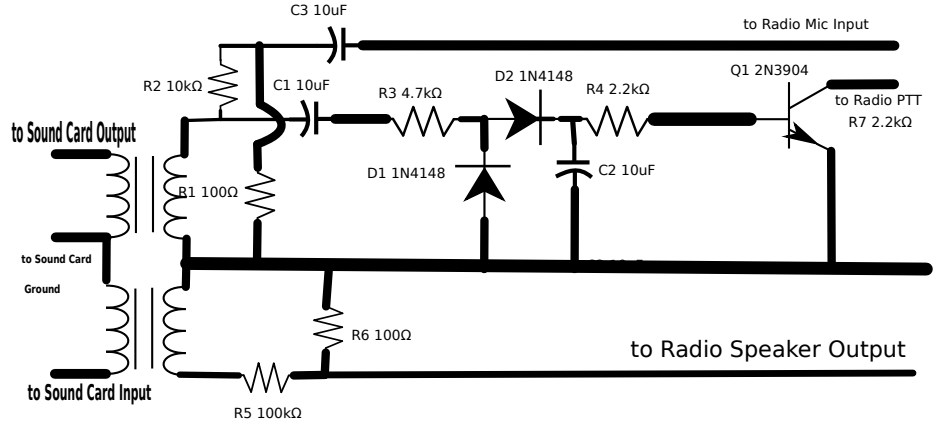
C3 10uF
to Radio Mic Input
R2 10kΩ
C1 10uF
R3 4.7kΩ
D2 1N4148
R4 2.2kΩ
Q1 2N3904
to Radio PTT
R7 2.2kΩ
to Sound Card Output
D1 1N4148
C2 10uF
R1 100Ω
to Sound Card
Ground
R6 100Ω
to Radio Speaker Output
to Sound Card Input
R5 100kΩ

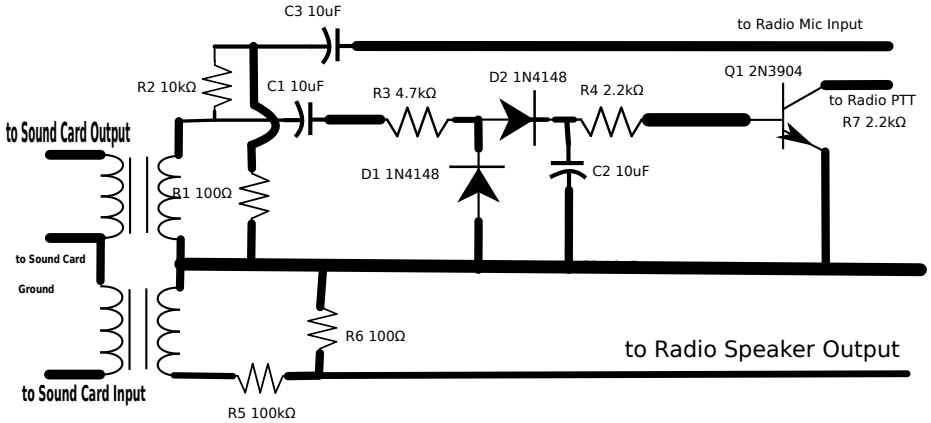
C3 10uF
to Radio Mic Input
R2 10kΩ
C1 10uF
R3 4.7kΩ
D2 1N4148
R4 2.2kΩ
Q1 2N3904
to Radio PTT
R7 2.2kΩ
to Sound Card Output
D1 1N4148
C2 10uF
R1 100Ω
to Sound Card
Ground
R6 100Ω
to Radio Speaker Output
to Sound Card Input
R5 100kΩ

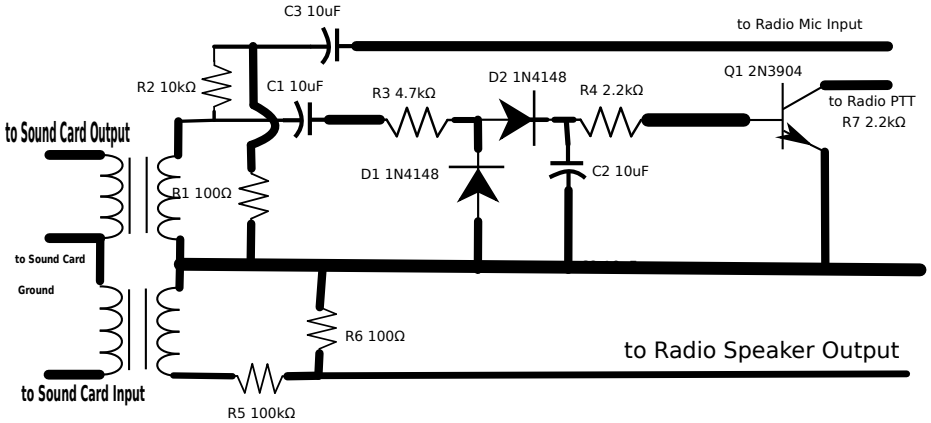
C3 10uF
to Radio Mic Input
R2 10kΩ
C1 10uF
R3 4.7kΩ
D2 1N4148
R4 2.2kΩ
Q1 2N3904
to Radio PTT
R7 2.2kΩ
to Sound Card Output
D1 1N4148
C2 10uF
R1 100Ω
to Sound Card
Ground
R6 100Ω
to Radio Speaker Output
to Sound Card Input
R5 100kΩ

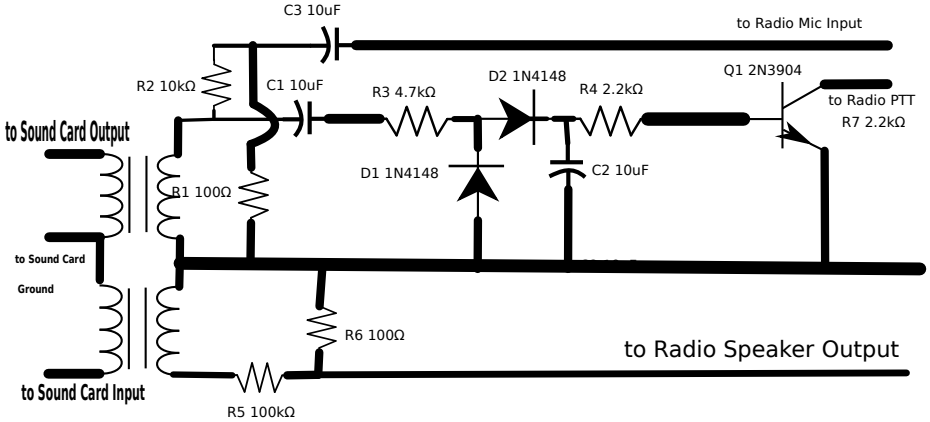
C3 10uF
to Radio Mic Input
R2 10kΩ
C1 10uF
R3 4.7kΩ
D2 1N4148
R4 2.2kΩ
Q1 2N3904
to Radio PTT
R7 2.2kΩ
to Sound Card Output
D1 1N4148
C2 10uF
R1 100Ω
to Sound Card
Ground
R6 100Ω
to Radio Speaker Output
to Sound Card Input
R5 100kΩ

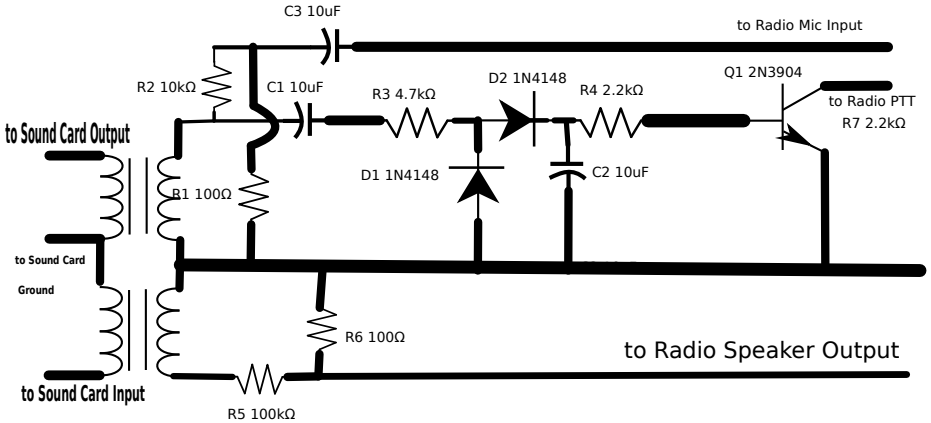
C3 10uF
to Radio Mic Input
R2 10kΩ
C1 10uF
R3 4.7kΩ
D2 1N4148
R4 2.2kΩ
Q1 2N3904
to Radio PTT
R7 2.2kΩ
to Sound Card Output
D1 1N4148
C2 10uF
R1 100Ω
to Sound Card
Ground
R6 100Ω
to Radio Speaker Output
to Sound Card Input
R5 100kΩ

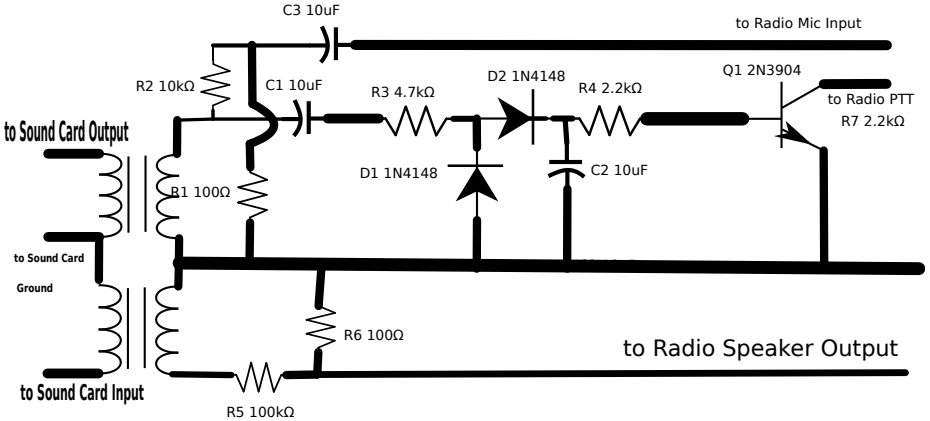
C3 10uF
to Radio Mic Input
R2 10kΩ
C1 10uF
R3 4.7kΩ
D2 1N4148
R4 2.2kΩ
Q1 2N3904
to Radio PTT
R7 2.2kΩ
to Sound Card Output
D1 1N4148
C2 10uF
R1 100Ω
to Sound Card
Ground
R6 100Ω
to Radio Speaker Output
to Sound Card Input
R5 100kΩ

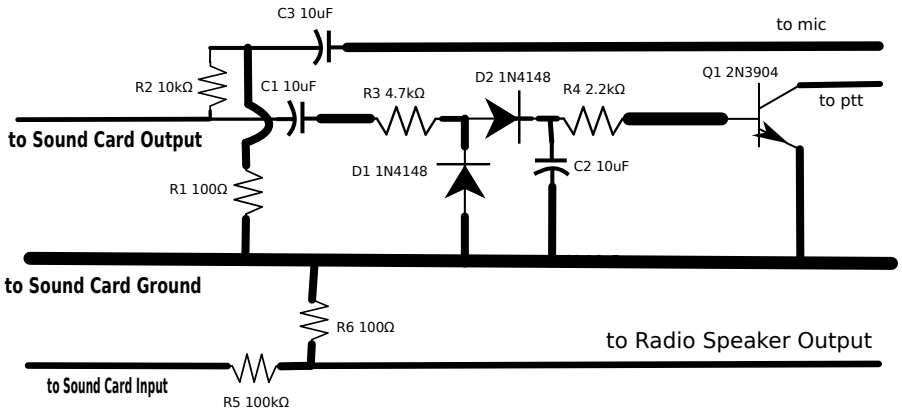
C3 10uF
to mic
R2 10kΩ
C1 10uF
R3 4.7kΩ
D2 1N4148
R4 2.2kΩ
Q1 2N3904
to ptt
to Sound Card Output
D1 1N4148
C2 10uF
R1 100Ω
to Sound Card Ground
R6 100Ω
to Radio Speaker Output
to Sound Card Input
R5 100kΩ

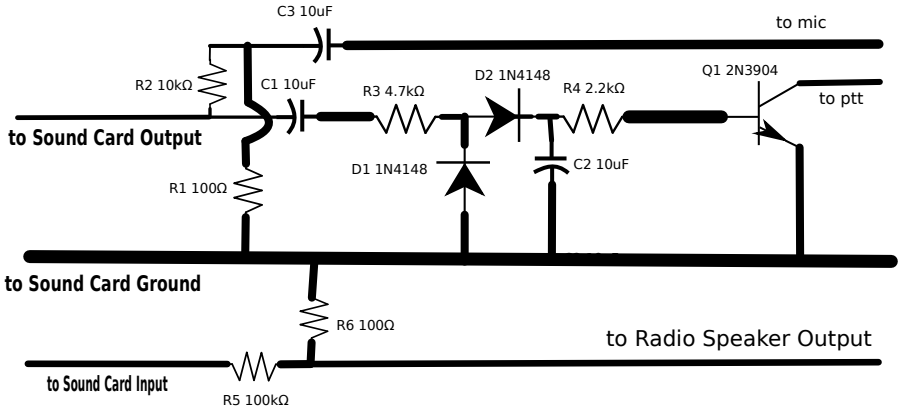
C3 10uF
to mic
R2 10kΩ
C1 10uF
R3 4.7kΩ
D2 1N4148
R4 2.2kΩ
Q1 2N3904
to ptt
to Sound Card Output
D1 1N4148
C2 10uF
R1 100Ω
to Sound Card Ground
R6 100Ω
to Radio Speaker Output
to Sound Card Input
R5 100kΩ

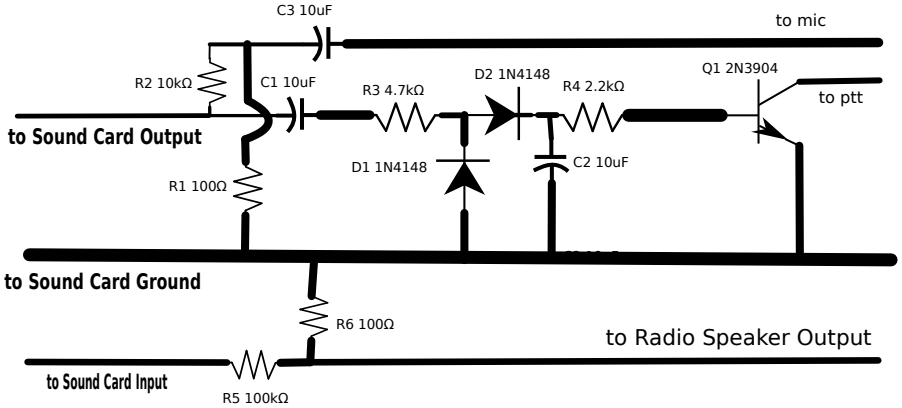
C3 10uF
to mic
R2 10kΩ
C1 10uF
R3 4.7kΩ
D2 1N4148
R4 2.2kΩ
Q1 2N3904
to ptt
to Sound Card Output
D1 1N4148
C2 10uF
R1 100Ω
to Sound Card Ground
R6 100Ω
to Radio Speaker Output
to Sound Card Input
R5 100kΩ

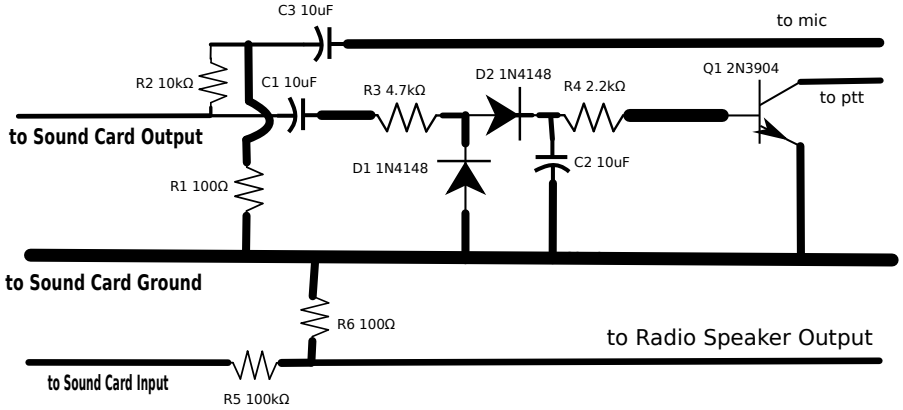
C3 10uF
to mic
R2 10kΩ
C1 10uF
R3 4.7kΩ
D2 1N4148
R4 2.2kΩ
Q1 2N3904
to ptt
to Sound Card Output
D1 1N4148
C2 10uF
R1 100Ω
to Sound Card Ground
R6 100Ω
to Radio Speaker Output
to Sound Card Input
R5 100kΩ

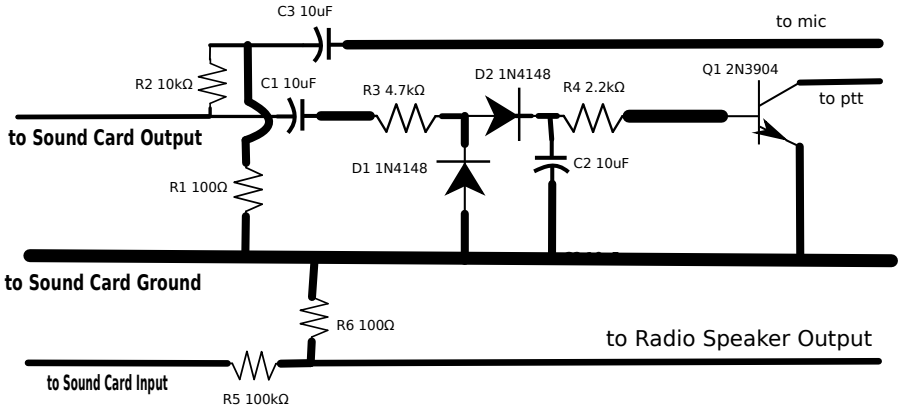
C3 10uF
to mic
R2 10kΩ
C1 10uF
R3 4.7kΩ
D2 1N4148
R4 2.2kΩ
Q1 2N3904
to ptt
to Sound Card Output
D1 1N4148
C2 10uF
R1 100Ω
to Sound Card Ground
R6 100Ω
to Radio Speaker Output
to Sound Card Input
R5 100kΩ

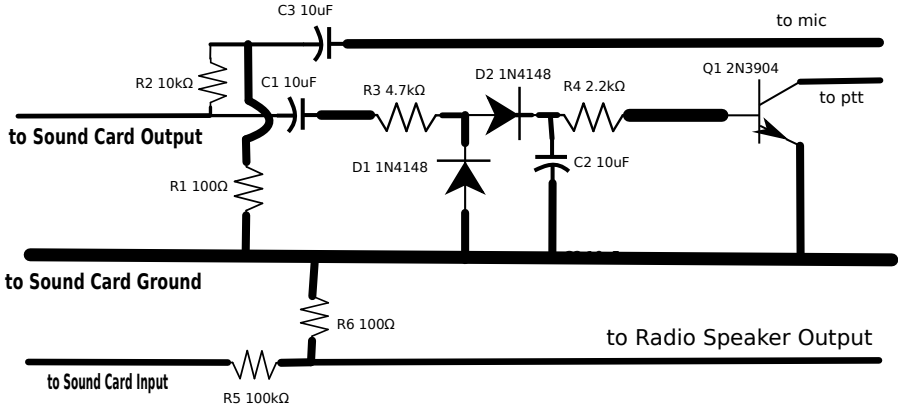
C3 10uF
to mic
R2 10kΩ
C1 10uF
R3 4.7kΩ
D2 1N4148
R4 2.2kΩ
Q1 2N3904
to ptt
to Sound Card Output
D1 1N4148
C2 10uF
R1 100Ω
to Sound Card Ground
R6 100Ω
to Radio Speaker Output
to Sound Card Input
R5 100kΩ

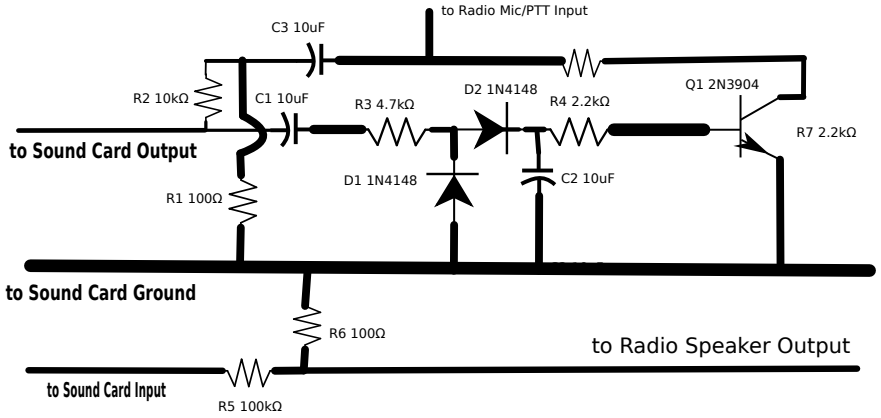
to Radio Mic/PTT Input
C3 10uF
R2 10kΩ
C1 10uF
R3 4.7kΩ
D2 1N4148
R4 2.2kΩ
Q1 2N3904
R7 2.2kΩ
to Sound Card Output
D1 1N4148
C2 10uF
R1 100Ω
to Sound Card Ground
R6 100Ω
to Radio Speaker Output
to Sound Card Input
R5 100kΩ

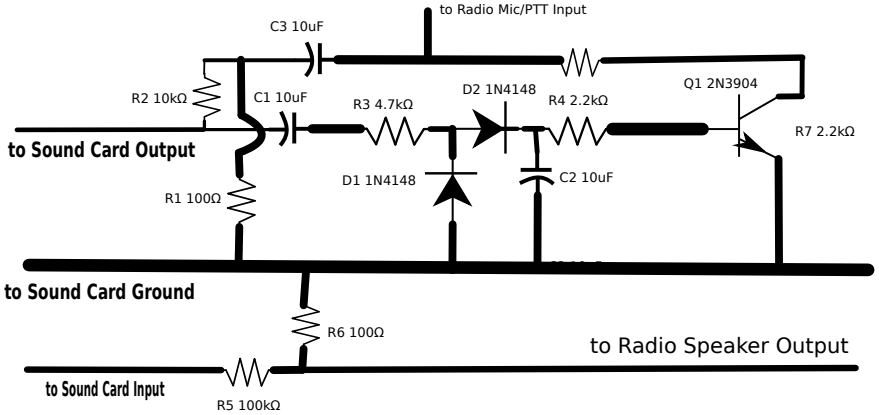
to Radio Mic/PTT Input
C3 10uF
R2 10kΩ
C1 10uF
R3 4.7kΩ
D2 1N4148
R4 2.2kΩ
Q1 2N3904
R7 2.2kΩ
to Sound Card Output
D1 1N4148
C2 10uF
R1 100Ω
to Sound Card Ground
R6 100Ω
to Radio Speaker Output
to Sound Card Input
R5 100kΩ

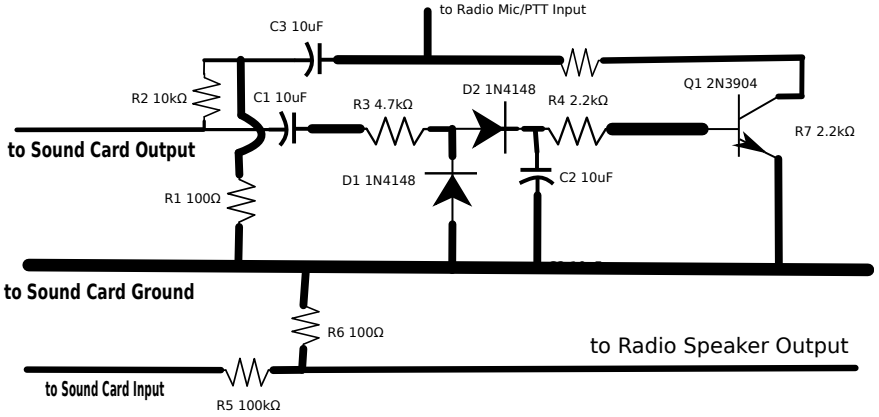
to Radio Mic/PTT Input
C3 10uF
R2 10kΩ
C1 10uF
R3 4.7kΩ
D2 1N4148
R4 2.2kΩ
Q1 2N3904
R7 2.2kΩ
to Sound Card Output
D1 1N4148
C2 10uF
R1 100Ω
to Sound Card Ground
R6 100Ω
to Radio Speaker Output
to Sound Card Input
R5 100kΩ

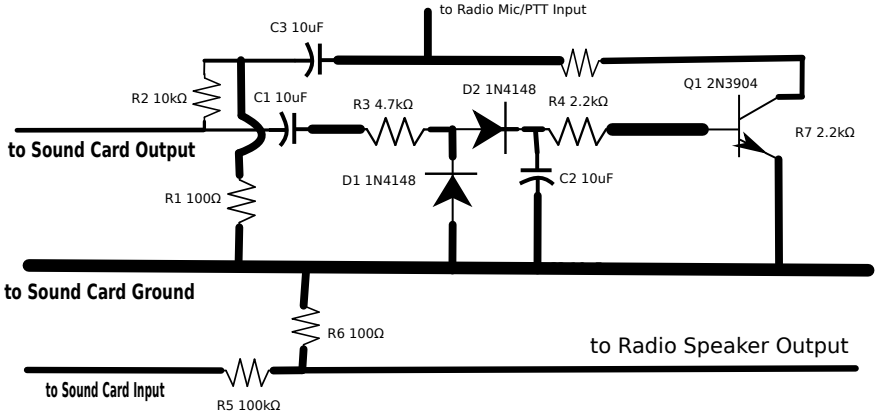
to Radio Mic/PTT Input
C3 10uF
R2 10kΩ
C1 10uF
R3 4.7kΩ
D2 1N4148
R4 2.2kΩ
Q1 2N3904
R7 2.2kΩ
to Sound Card Output
D1 1N4148
C2 10uF
R1 100Ω
to Sound Card Ground
R6 100Ω
to Radio Speaker Output
to Sound Card Input
R5 100kΩ

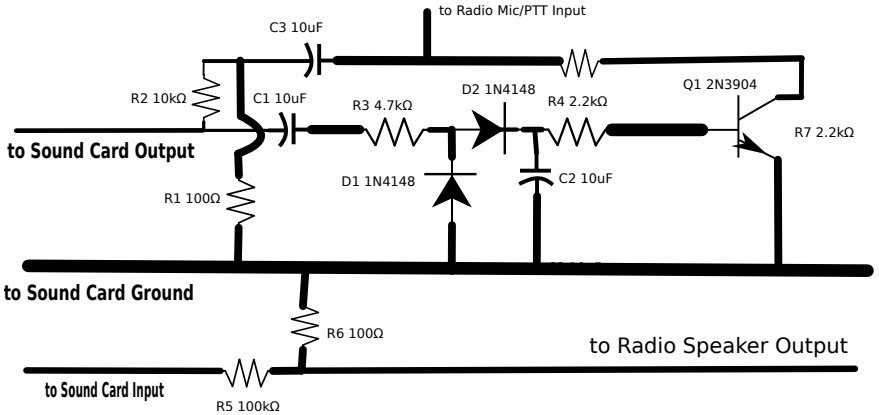
to Radio Mic/PTT Input
C3 10uF
R2 10kΩ
C1 10uF
R3 4.7kΩ
D2 1N4148
R4 2.2kΩ
Q1 2N3904
R7 2.2kΩ
to Sound Card Output
D1 1N4148
C2 10uF
R1 100Ω
to Sound Card Ground
R6 100Ω
to Radio Speaker Output
to Sound Card Input
R5 100kΩ

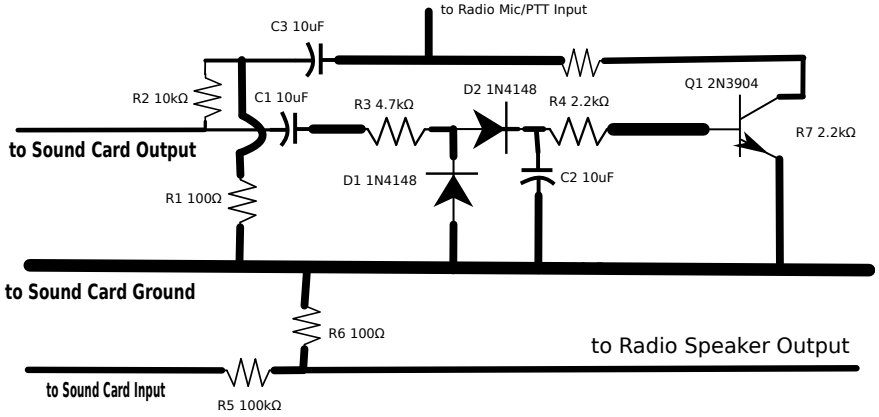
to Radio Mic/PTT Input
C3 10uF
R2 10kΩ
C1 10uF
R3 4.7kΩ
D2 1N4148
R4 2.2kΩ
Q1 2N3904
R7 2.2kΩ
to Sound Card Output
D1 1N4148
C2 10uF
R1 100Ω
to Sound Card Ground
R6 100Ω
to Radio Speaker Output
to Sound Card Input
R5 100kΩ